Instruction manual

Gas round gas combustion zone round

CONTEÚDO **Gas**

- Material supplied ….....4
- Components.....5
- Important safety information.....6
- Installation.....7
- Operating instructions.....23
- Checklist of problems.....37
- Failures codes list-APP..…….....41
- Maintenance.....45
- General dimensions.....46
- Specifications.....47

1—SUPPLIED MATERIAL

1. Gas combustion zone round ;
2. Remote control;
3. Transformer (3 adapters);
4. Protection glasses (Option);
5. Protective cover (Option);
6. Home automation (Option);
7. Decorative stones (Option).
8. Wifi box para App My fire (Opção);

4

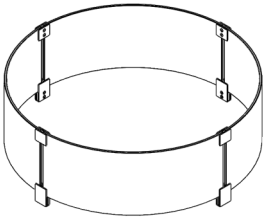

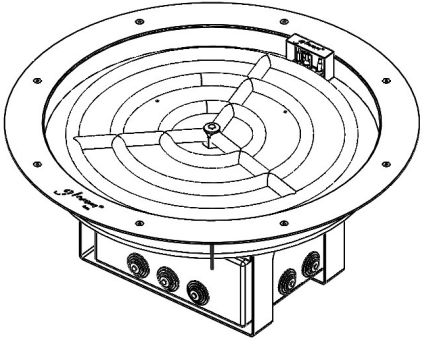

1

2

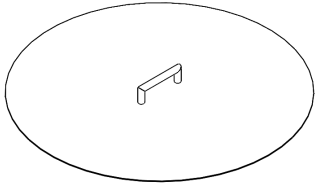

5

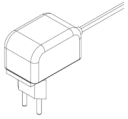

3

2—COMPONENTS

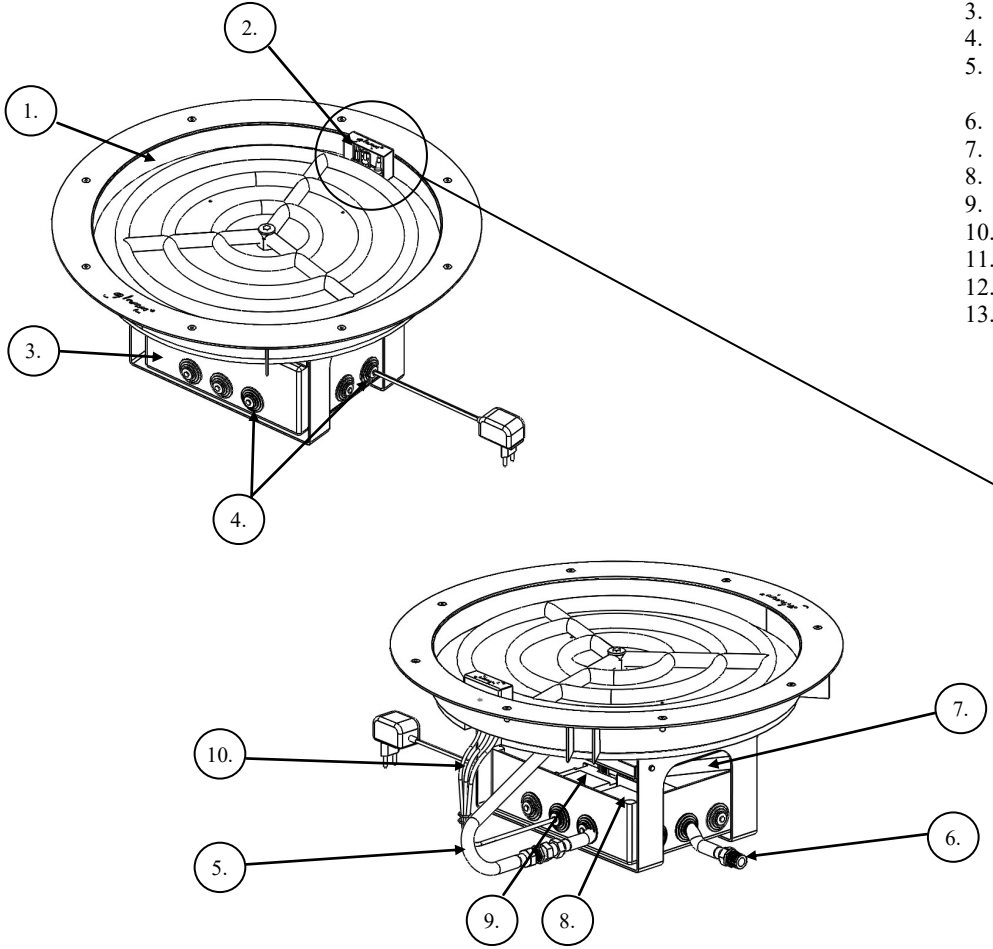

1. Gas combustion zone round ;
2. Ignition assembly;
3. Technical box;
4. Available outputs;
5. Gas combustion zone round power connection;
6. Connection for gas connection;
7. Technical cover box;
8. Valve;
9. Receiver/ battery operated option (DC);
10. Pilot connections;
11. Lighter;
12. Pilot;
13. Thermocouple.

3—IMPORTANT SAFETY INFORMATION

Read these instructions carefully before installing or operating the appliance. Failure to do so may result in fire or explosion, causing property damage, personal injury, or loss of life. The service and installation must be carried out by a specialist / experienced technician.

This product has been developed only for outdoor use. Do not use it in any indoor space.

3.1. WHAT TO DO IF YOU SMELL GAS

- Do NOT operate any appliance.
- Do NOT touch any electrical switch; do NOT use any phone in your building.
- Immediately evacuate the area and contact the gas supplier. Follow the gas supplier's instructions.
- If you cannot reach the gas supplier, call the fire department.

Installation and service must be performed by a qualified installer, service agency, or the gas supplier. Installation shall conform with local codes, or in the absence of local codes, in accordance with the National Fuel Gas Code ANSI Z223.1/NFPA 54 or the IFGC or CSA B149.1. All piping and tubing must comply with local codes and ordinances.

Use only your hand to push in or turn the gas control knobs. Never use tools. If a knob will not push in or turn by hand, do not try to repair it. Call a qualified service technician. Force or attempted repair can result in a fire or explosion.

Do NOT use a product if you suspect it has been subjected to high temperatures, damaged, tampered with, or taken apart. Do NOT use a product if you suspect it has been under water or that liquid has seeped into the product. Any of these incidents can cause leakage or other damage that may affect proper operation and cause potentially dangerous combustion problems.

Do NOT store or use gasoline or other flammable vapors and liquids in the vicinity of this control or other appliances.

3.2. ELECTRIC SHOCK HAZARD

- Read these instructions carefully. Failure to follow them could result in property damage, personal injury, or loss of life.
- This control must be electrically wired and operated in accordance with all codes and local regulations. Service and installation must be performed by a trained, experienced service technician.
- Do NOT use the product if you suspect it may be damaged.

4— INSTALLATION

<u>ATTENTION</u>: All installation procedures must be carried out by a qualified technician.

- This is an outdoor gas combustion zone ;
- When placing the gas combustion zone round on a terrace, please note that it must have an open area of at least 20% of the entire area of the total space;

4.1—Flammable Materials

- Do not place flammable materials around the fireplace, in a space of at least 1 meter around it.

4.2—Materials: stone/metal/ceramics

- A - 100 mm;
- B - 100 mm;
- C - 500 mm;

4.3—Other Non-Flammable Materials

- A - 200 mm;
- B - 250 mm;
- C - 600 mm;

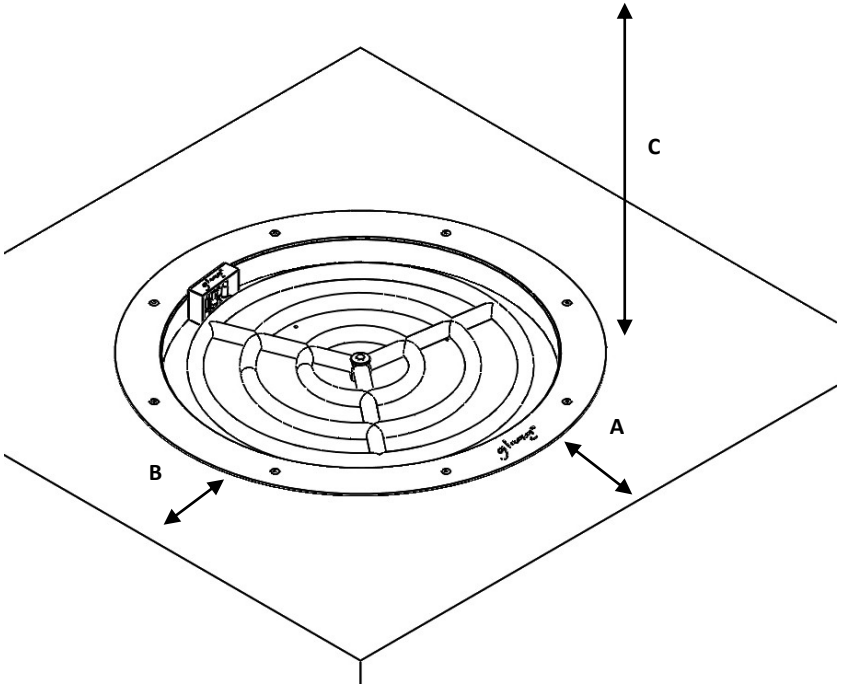

4.4— EMBEDDING DIMENSIONS:

In order to install the gas combustion zone round , the dimensions given in Table 1 must be taken into account.

Gas combustion zone round	Diameter (D)	Height (E)
	610mm	>290mm

Table 1:Minimum dimensions required for the installation hole

Note: The surface where the gas combustion zone round is installed must be properly leveled.

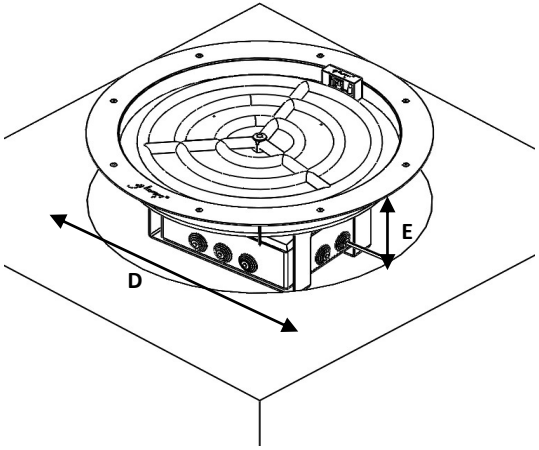

Figure 1:Representation of the embedding hole

4.5—VENTILATION AREA:

Adequate ventilation must be provided for proper installation.

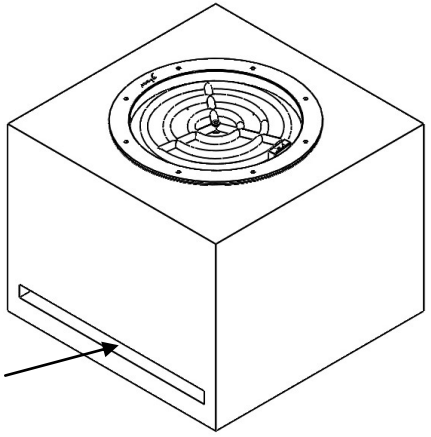

Required ventilation area 552cm^2

When installing the gas combustion zone round , ventilation (ca. 50mm) must be ensured around the gas combustion zone round when embedded (Figure 2).

Circulation of an air flow shall be ensured so that it covers the embedded components.

Therefore, air must be supplied to the lower part of the installation site for the correct functioning of the system. (Figure 2)

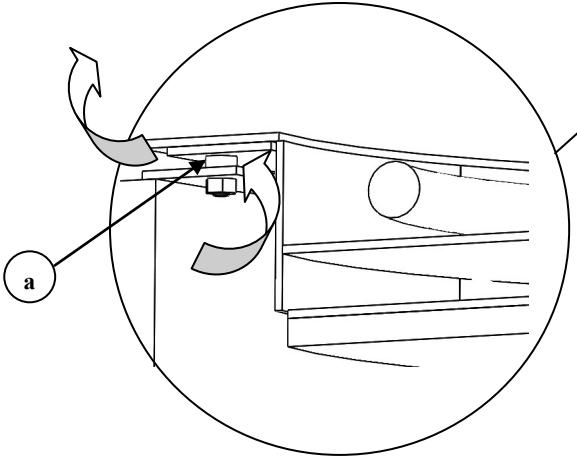

Note: The gas gas combustion zone round is provided with its own spacers (a) in order to avoid improper installation (obstruction of the air flow required to ventilate the gas combustion zone round).

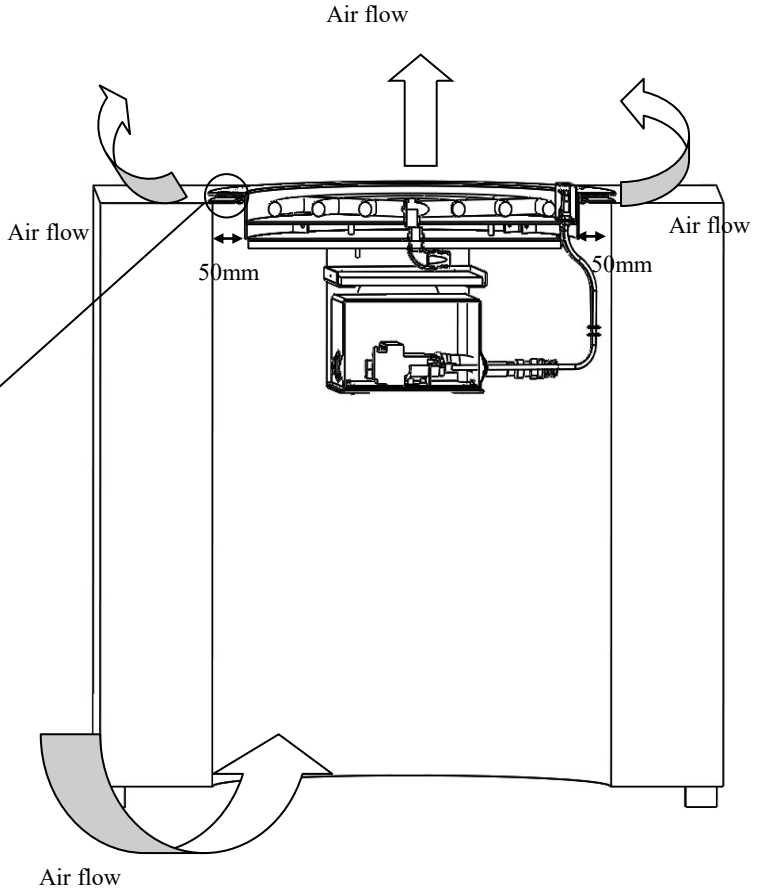

Figure 2:Representation of free space and air circulation.

In order to correctly connect the electric wires follow the colour scheme mentioned in Figure 19.

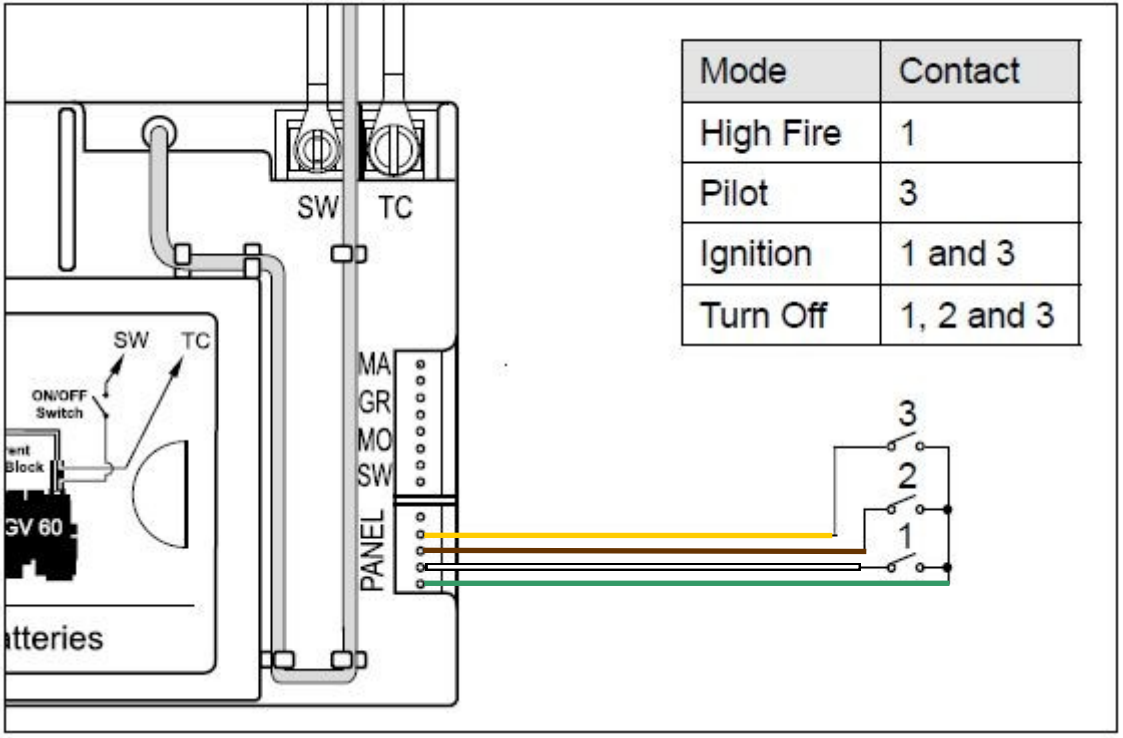

Mode	Contact
High Fire	1
Pilot	3
Ignition	1 and 3
Turn Off	1, 2 and 3

Color code:

1-Green / White

2-Green / Brown

3-Green / Yellow

Figure 19:Technical diagram of connections to Home Automation

If you need more information about installing your Gas Fire Pit, please contact an Official GlammFire Retailer.
To find a GlammFire Official Reseller, please visit:

www.glammfire.com

5—OPERATING INSTRUCTIONS

Synchronization Receiver (first time use only)

1. Insert batteries or connect AC mains power. With mains adapter, batteries can be used for backup;
2. Place ON/OFF switch (if equiped) to ON position;
3. The receiver will read the remote control code: Momentarily press the reset button on the controller until 2 beeps are heard. After the second beep release the reset. 20 seconds later press the "-" button on the control. Two beeps confirm that the remote control is ready for use.

Note: This is a one time setting only, and it is not required after changing the batteries in the handset or receiver.

NOTICE: The handset and receivers are not interchangeable with previous electronics.

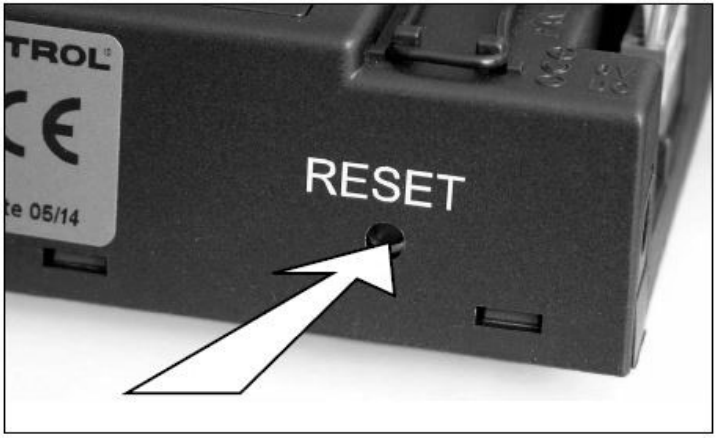

Figure 20: Identification of the “Reset” button on the controller

4.6—INSTALLATION PROCEDURE

The surface where the gas combustion zone round is installed must be as levelled as possible.
Prior gas and electric installation is required before the installation of the gas combustion zone round .

IMPORTANT: If the intended connection is a direct connection from a gas cylinder to the gas combustion zone round , always use the canister adapter along with a gas reducer. Failure to do so may result in gas combustion zone round malfunction.

The installation of the gas combustion zone round must be carried out by a qualified specialist.

It must be guaranteed that the gas combustion zone round installation is carried out in accordance with all nationally enforced safety and construction regulations.

When proceeding the gas combustion zone round installation, the power supply to be used must be chosen (AC / DC).

The AC connection (electricity) is always preferable since an easy access to the gas combustion zone round technical box must be provided for the DC connection (batteries).

Otherwise the gas combustion zone round must be removed from the installation in order to access the technical box every time there is the need to replace the controller batteries (not recommended).

If the burner is to be used using the electric current, connect the gas supply pipe to the free gas pipe of the control box and then connect the electric plug to the socket previously installed for this purpose (Figure 3).

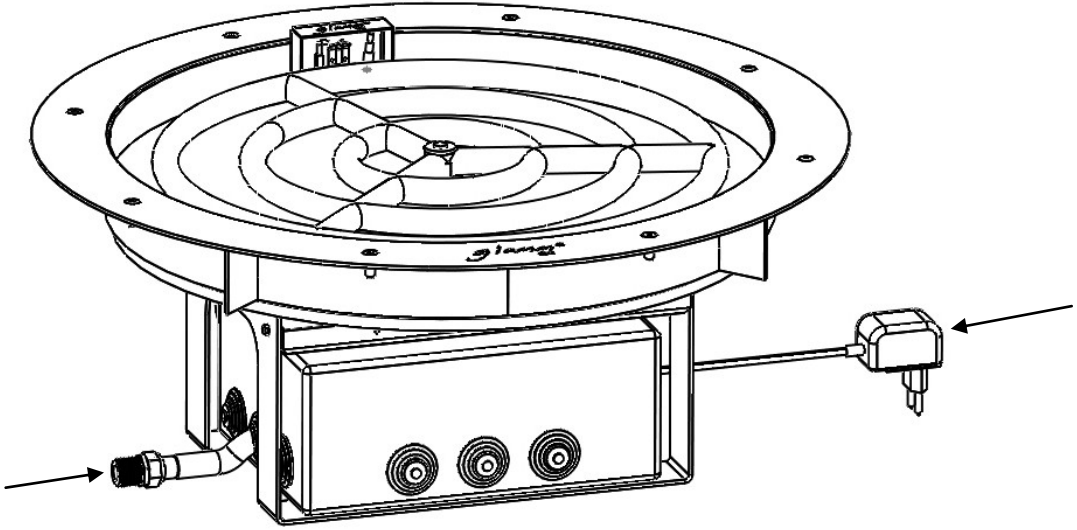

Figure 3:Identification of gas/electricity connections

If the gas combustion zone round is to be used with battery power, please open the technical box.

To do this, use a Philips short-wire switch and open the 4 screws (G) of the cover (Figure 4).

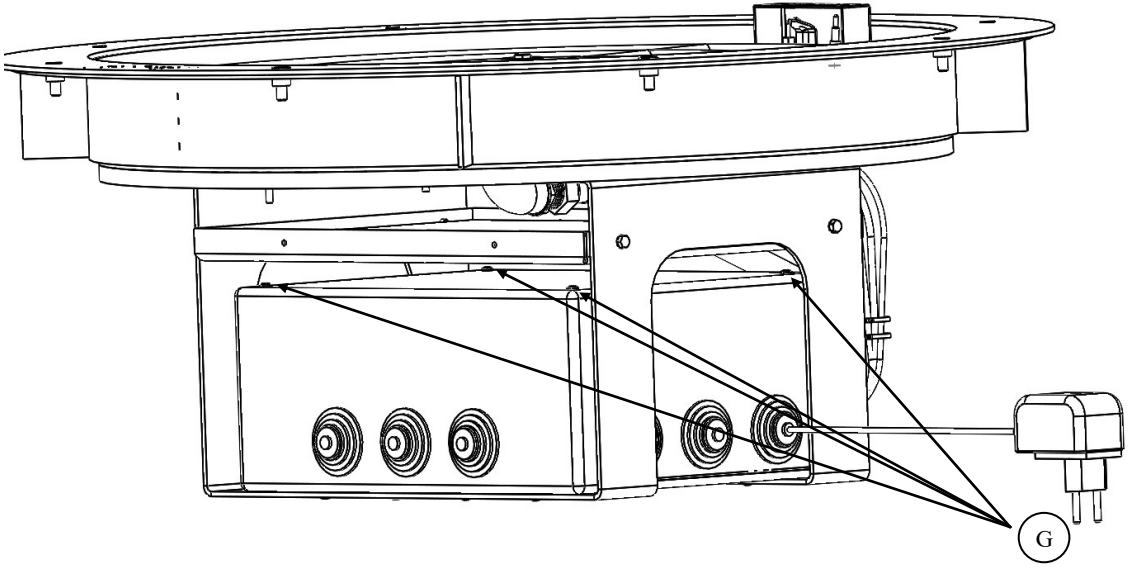

Figure 4:Identification of technical box screws

Open the cover (H) and slide it up (I) and then apply small force on its side (J) in order to remove the shaft from the lid of the box and thus remove the cover (Figure 5).

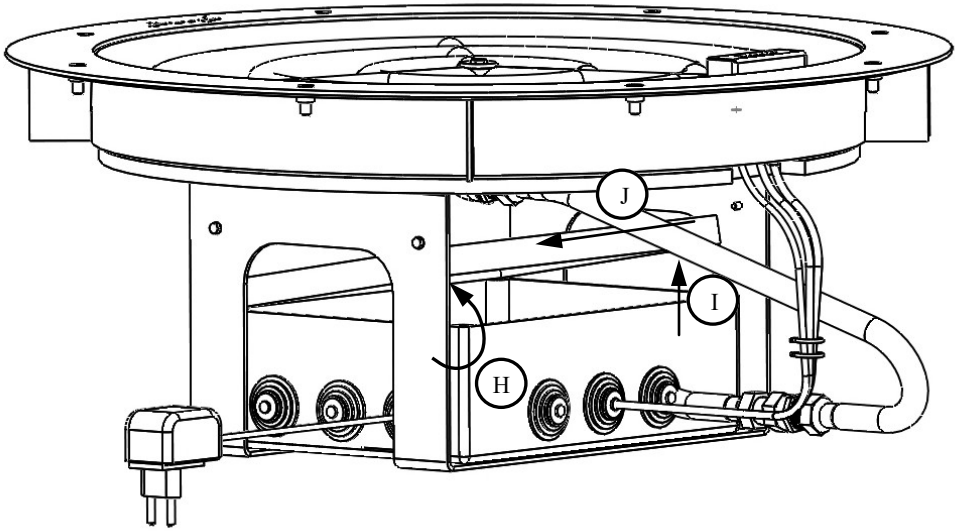

Figure 5:Technical box cover opening

With the cover open or ajar open the receiver cover and insert the batteries (Figure 6).

After insertion of the batteries carry out the previous steps in order to close the cover of the technical box.

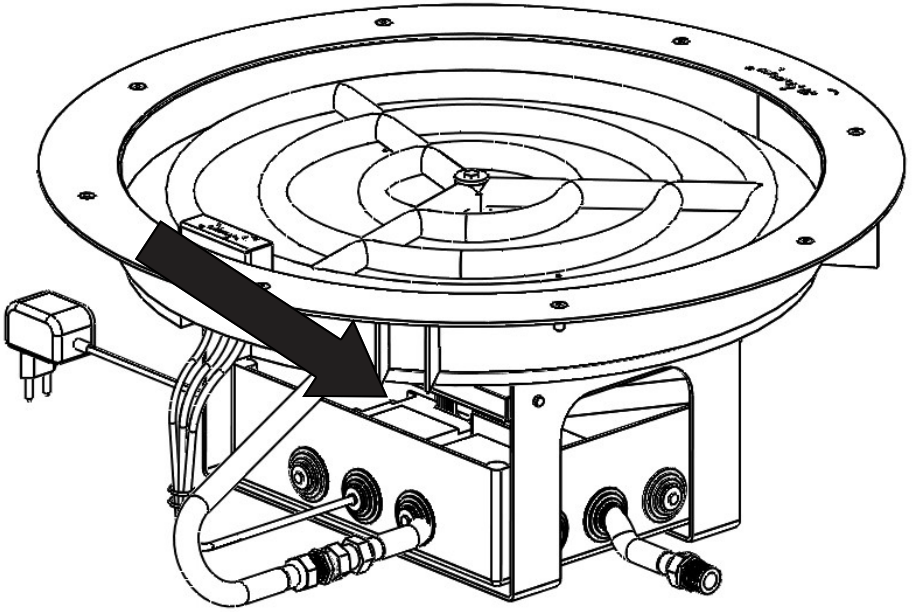

Figure 6: Placing the batteries in the receiver

To finish the connections connect the gas supply pipe to the spare gas pipe of the control box and then connect the electric plug to the power plug previously installed for this purpose (Figure 7).

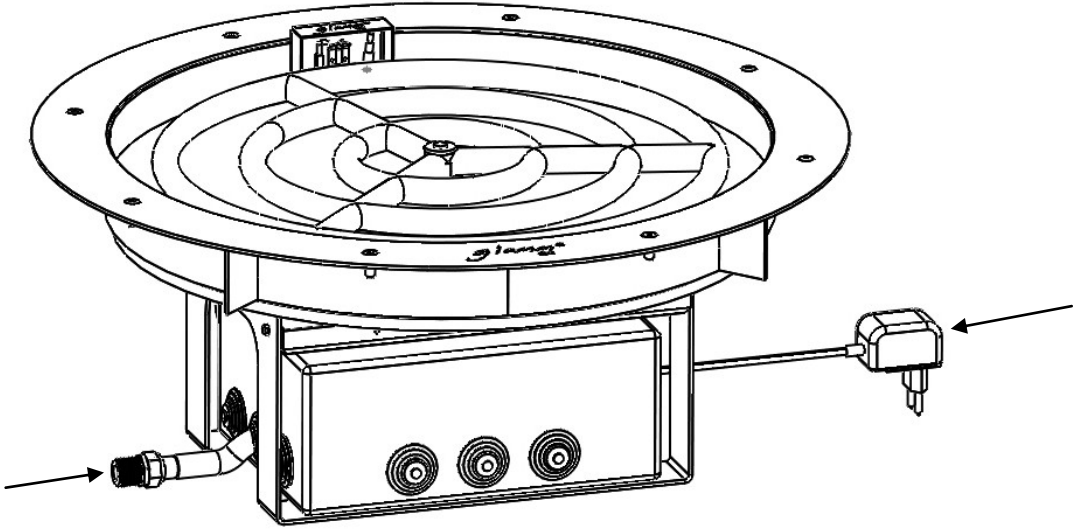

Figure 7: Connect the power transformer

After the gas and electric connections are made insert the gas combustion zone round in the desired location (Figure 8).

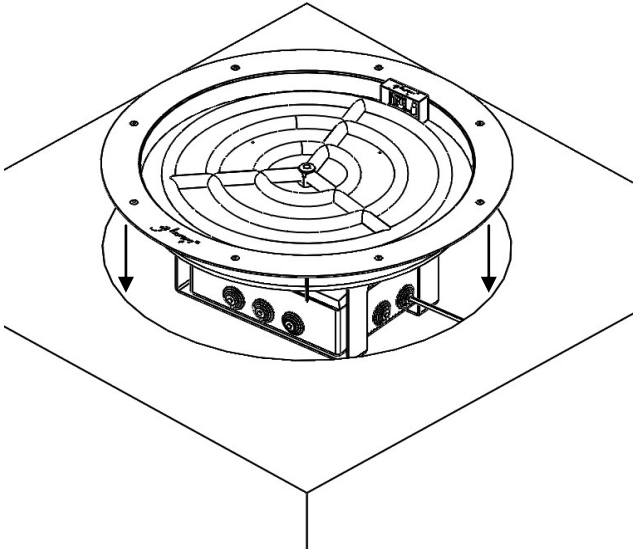

Figure 8: Placing the gas combustion zone round in the intended location

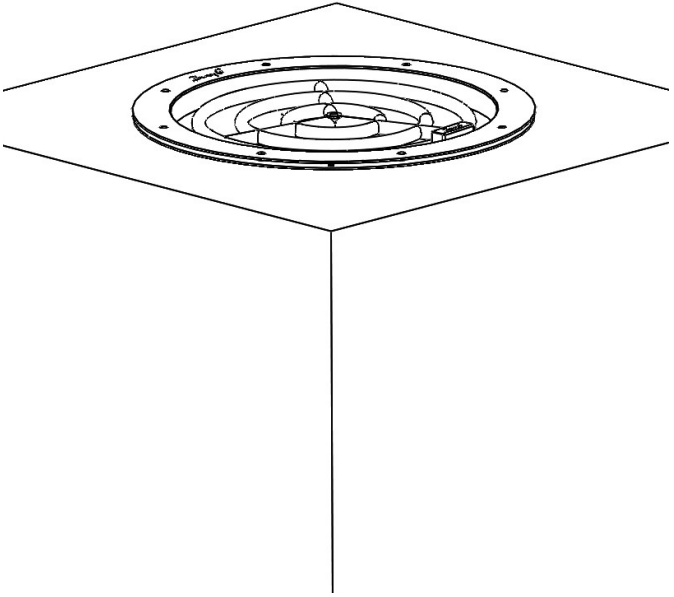

Figure 9: Installed gas combustion zone round

4.6.1—PROTECTION GLASSES (OPTION)

The installation of the option Protection Glasses must be carried out after the insertion of the gas round gas combustion zone round into the hole intended for its installation.
First, with the help of a wrench, loosen slightly the screws of the support (K) and (L) for better placement of the glass. Place two supports (K) in the desired location, then the glass. These steps need to be respected to avoid damage to the glass.

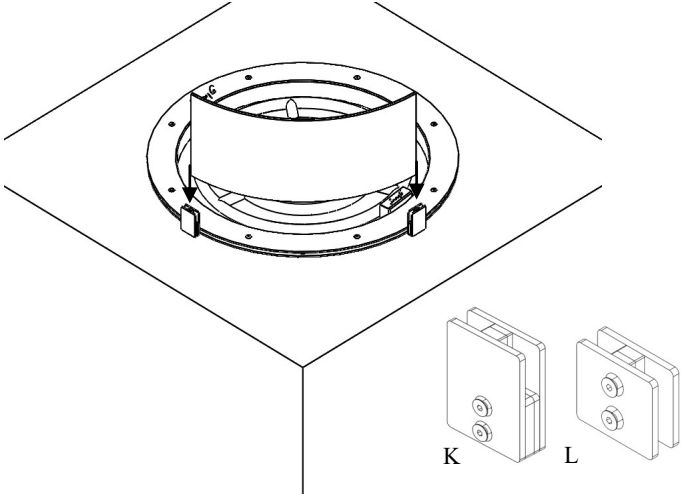

Figure 10: Installation of the first glass

After the first glass is placed, proceed to the installation of the second glass by inserting another support (K) and then tighten the support (L) between the two glasses. Repeat the process for the four glasses.

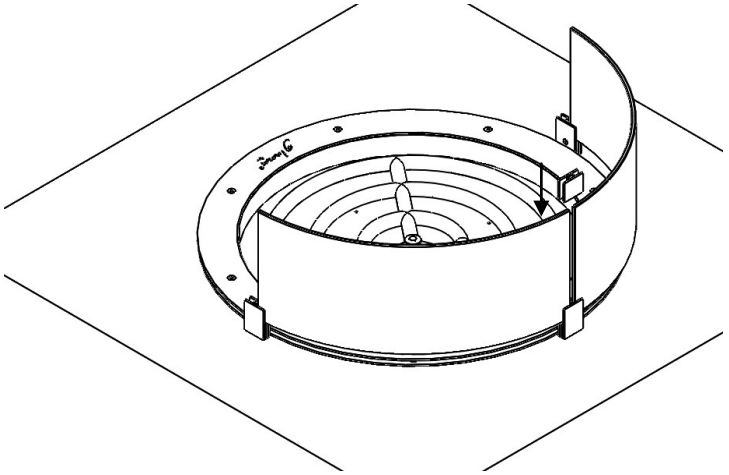

Figure 11: Installation of the two glasses

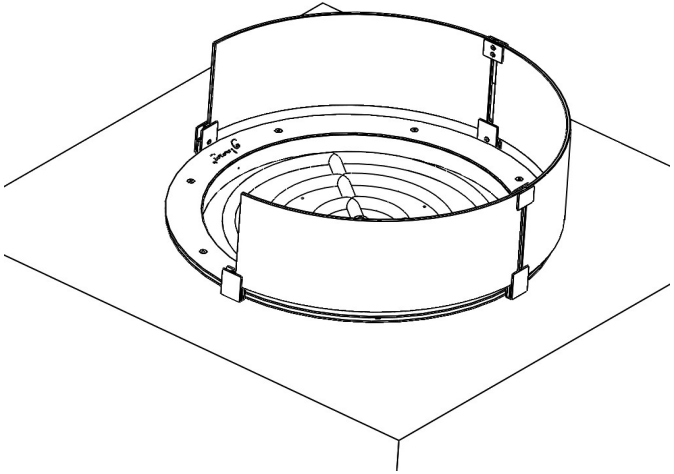

Figure 12: Installation of the three glasses

Check that the set is according to figure 13.

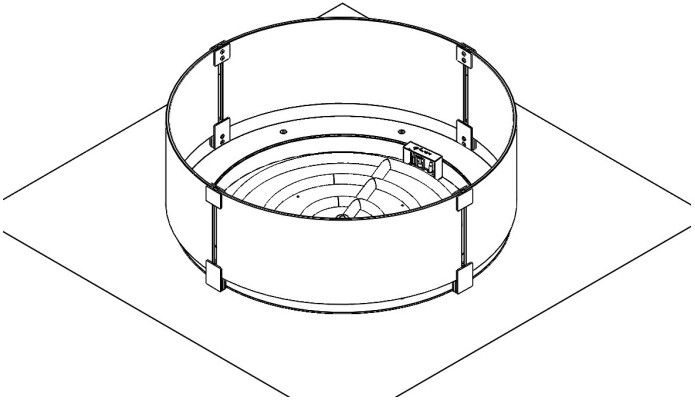

Figure 13: Glass installation completed

To install the Protective Cover option after the installation of the gas combustion zone round , place the gas combustion zone round as shown in Figure 14.

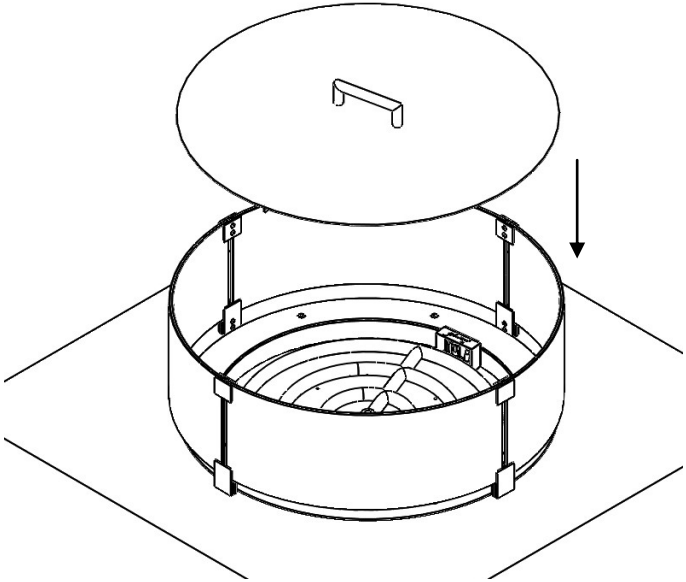

Figure 14: Installation of the protective cover

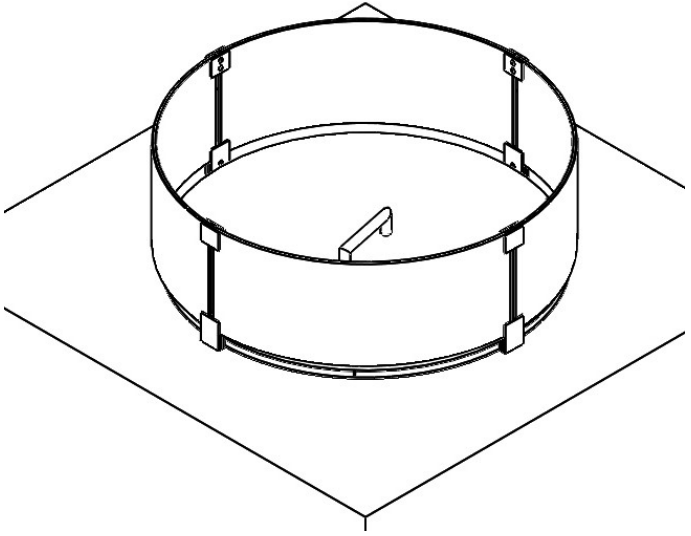

Figure 15:Protective Cover option placed

4.6.3— HOME AUTOMATION (OPTION)

The gas combustion zone round has the possibility of connecting it to the home automation system.

In order to connect it, open the technical box cover (M) and slide it upwards (N) and then apply a small force on its side (O) in order to remove the axis of the cover and thus remove the cover (Figure 16).

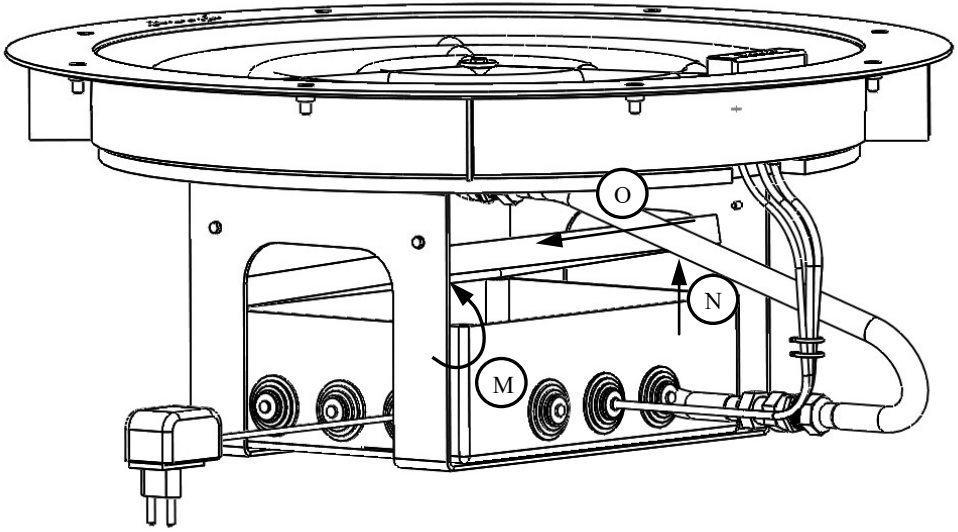

Figure16:Technical box cover opening

With the technical box cover opened, it is possible to identify the connections (P) available for the system (Figure 17 and 18).
Use the available outputs (Q) to pass the necessary cable for connection to the available terminals (P).

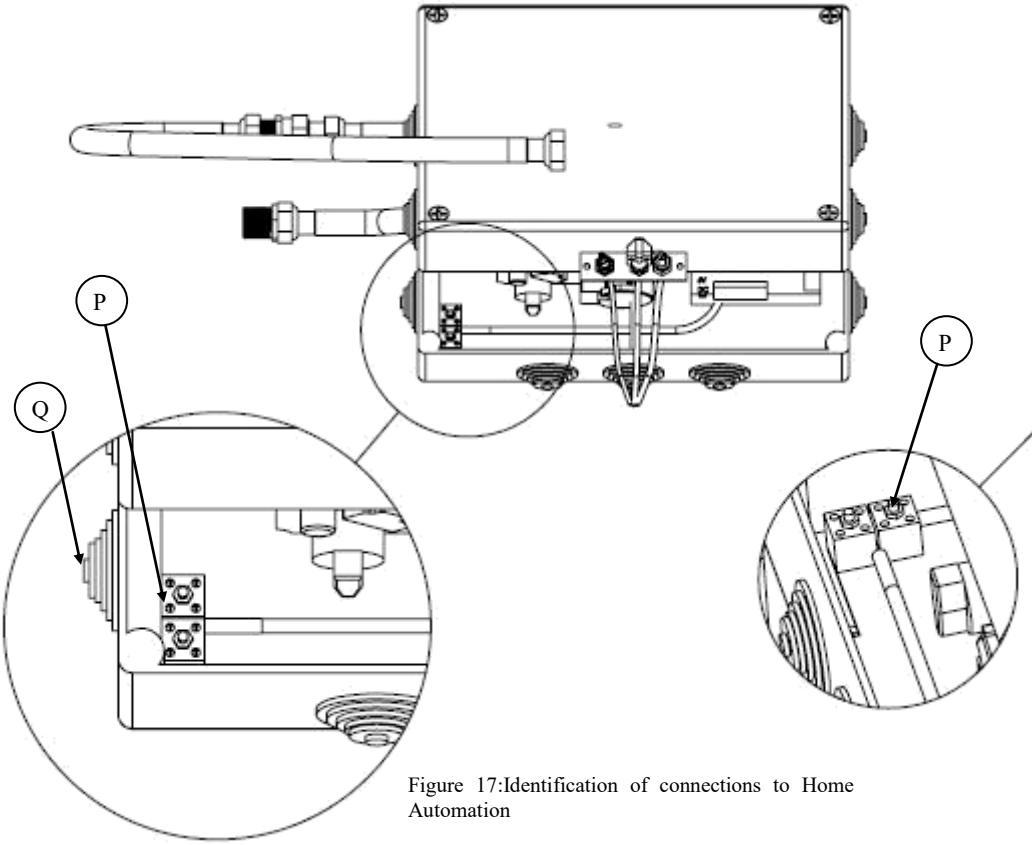

Figure 17:Identification of connections to Home Automation

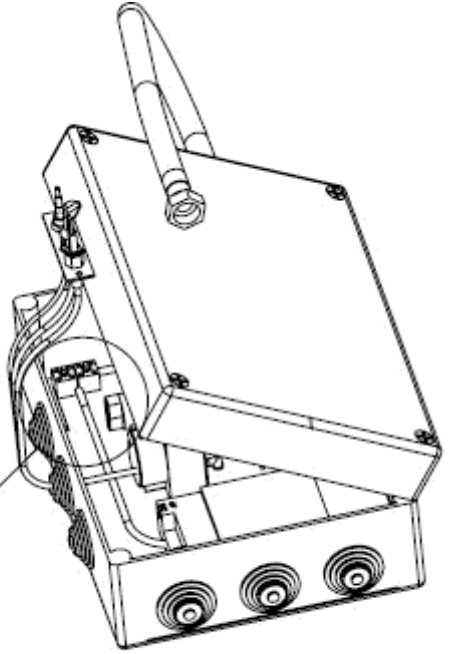

Figure 18:Identification of connections to Home Automation

The remote control has the functions of switching the appliance on/off and increasing/ reducing the flame. This equipment is equipped with temperature sensing that allows the use of the myfire app.

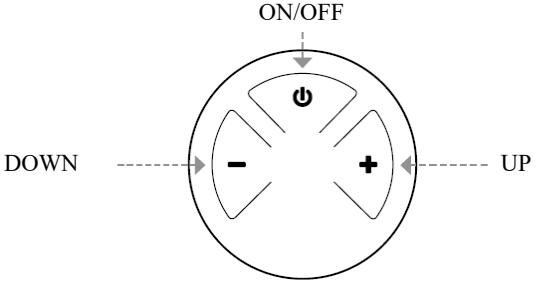

Technical data

Ambient temperature range
CSA: 32ºF to 131ºF
CE: 0ºC to 55ºC

Radio frequency:
CSA: 915MHz to U.S and Canada
CE: 868MHz to Europe

Power supply:
Batteries 2x 1.5V “AAA” (quality alkaline recommended)

Notice:

Wiring of valve and receiver must be completed before starting ignition. Failure to do so could damage the electronics.

The remote control and receivers are not interchangeable with previous electronics.

Warning:

- Without using a mains adapter, battery replacement is recommended at the beginning of each heating season.
- Old or dead batteries should be removed immediately. If left in the unit the batteries can overheat, leak, and/or explode.
- Do NOT expose batteries to direct sunlight, excessive heat, fire, moisture, or severe impact. Each of these conditions can cause the batteries to overheat, leak, and/or explode.
- Batteries must be kept within their recommended temperature limits (ambient battery temperature reange: 32ºF to 131ºF/0ºC to 55ºC).
- New and old batteries and different brands of batteries should not be used together. Mixing of various batteries can cause the batteries to overheat, leak, and/or explode.

TURN FIRE ON AND OFF

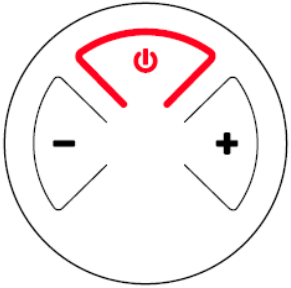

- Press and hold the ⏻ button until two short beeps confirm the start sequence has begun; release button.
- Main gas flows once pilot ignition is confirmed.
- Press and hold the ⏻ button to turn OFF.

Attention:
When the pilot ignition is confirmed, the flame starts at the maximum.

STANDBY MODE (PILOT FLAME):

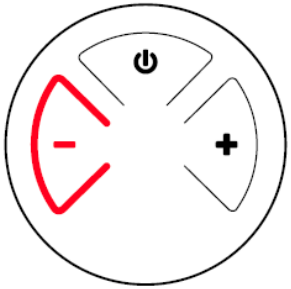

- Press and hold the “-” button to set appliance to pilot flame.

FLAME HEIGHT ADJUSTMENT

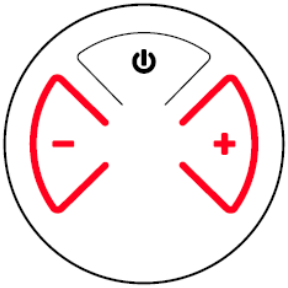

- To increase flame height press and hold “+” button;
- To decrease flame height or to set appliance to pilot flame, press and hold “-” button.

DESIGNATED LOW FIRE AND HIGH FIRE

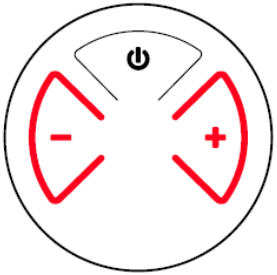

- To go to high fire, double-click “+” button;
- To go to low fire, double-click “-”button.

Note:
Flame goes to high fire first before going to low fire.

The wi-fi box has a variable power supply between 5 and 24V.
The myfire Wi-fi box comunicates with a home network (Wi-fi router) ever a wireless signal.

1. The my fire Wi-fi box must be wired to the receiver according to the my fire app setup diagram.
2. Connect receiver to mains power. The myfire Wi-fi box start with the Acess Point mode (green /blue LED blinking). Go to “myfire app setup”...

MINIMUM REQUIREMENT FOR WI-FI ROUTER

- IEEE 802.11n/g/b compatibility
- WPA2 encryption
- Radio frequency: 2.4GHz band
- Wireless auto channel: Automated search for WLAN rádio channel free or interference
- “User Datagram Protocol” (UDP) support
- Multicast DNS (mDNS) for Kwik Connect Process

MINIMUM REQUIREMENT SMART DEVICE:

- IOS 8.0 or Android 4.2

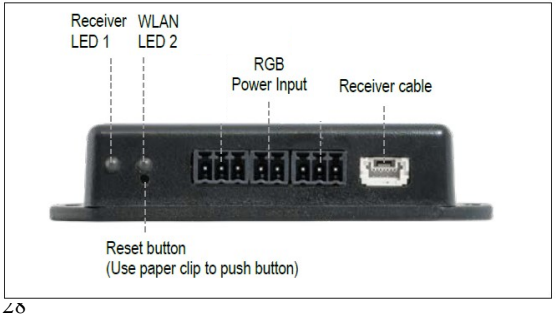

Technical data:

- Ambient temperature range:

CSA: myfire wi-fi box 32ºF to 176ºF
CE: myfire wi-fi box 0ºC to 80ºC

- Radio frequency

CSA+ CE: 2.4GHz

- Power supply:

6V connection to the receiver which is connected to na AC mains adapter

- Wireless comunication

WPA2 Authentication
AES 256 bit encryption security
Compatible with IEEE 802.11 b/g/n

- Power consumption

CSA + CE: Nominal: Max.0.5W
CSA + CE: Standby: Max.5 mA

LED INDICATION ON MY FIRE WI-FI BOX

	LED	Status
Receiver LED 1	Green	Connected to receiver
	Red	Not connected to receiver
	Off	Standby mode is active or no Power supply
WLAN LED 2	Green	Wi-fi conection is safe
	Blue/ Green blinking	Acess point mode (AP mode) is active
	Red	Not connected to home network (Wi-fi router)
	Off	Standby mode is active or no power supply

RESET STATUS ON MY FIRE WI-FI BOX

Press Reset Button	LED	Function
Power-On-Reset or 1 sec. reset	LED 2 WLAN, flashes red, green and blue	If no network is set. the AP mode will be activated for 2 hours. When the network isn't set after 2 hours, the wifi-box will go to Standby mode. Once a network is set, the Wi-fi box will connect directly.
7 sec.	LED 1 WLAN flashes every 500 ms in blue	Remove the Wi-fi settings and turns on the Acess point mode (AP mode) for 2 hours.
20 sec.	LED 1 WLAN flashes every 50 ms in blue	Erases all setup data. The wi-fi chip will be set to the last version after the reboot. The AP-Mode will be activated for 2 hours.

MYFIRE APP SETUP

Notice: For myfire app setup, you will need your Wi-fi network SSID and password.

Initial Setup:

1. Download myfire app from Apple App Store or Google Play Store;
2. Touch screen to start app setup. Choose language, temperature (ºC or ºF) and time format (12 or 24 hours);

Registration:

You must register before logging in. Registration is one time only.

1. Fill in data and accept the "Privacy Policy".
2. Touch link to confirm email verification.

Login:

1. Fill in your registration password;
2. Accept "Terms and conditions". Touch the "Login" button.

Connect smart device to myfire wi-fi box:

1. Press the icon. ⊕
2. The home Wi-fi Network name your smart device is currently connected to is displayed;
3. Type in the password of the displayed Home Wi-fi Network;
4. Touch "Connect". The myfire App starts connecting the myfire Wi-fi box to the selected Home Wi-fi Network.

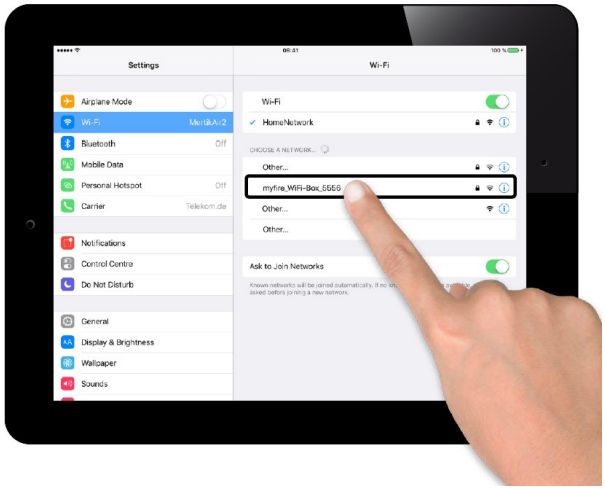

Complete myfire App setup

1. Type in a name for your fireplace or select an icon;
2. Enable other add-ons if they are installed;
3. Touch “Finish” to complete the setup.

The home screen is displayed and the myfire App is ready to go.

Aplication start: **Gas**

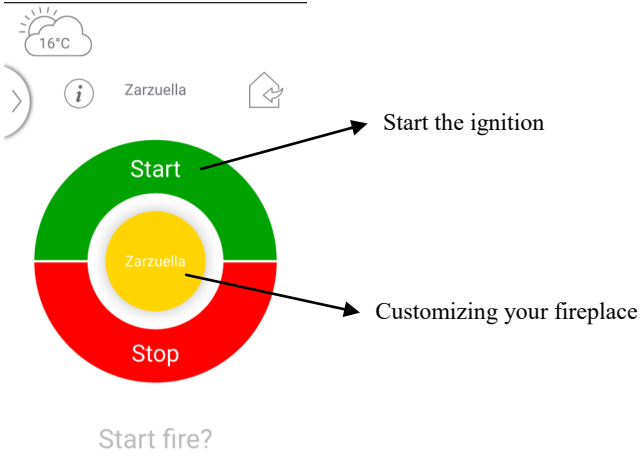

With the ignition of your fireplace, wait for the application to show a similar screen to the one shown below.

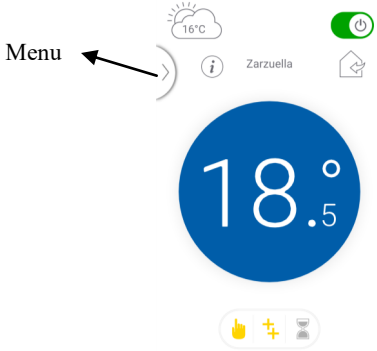

With the menu selection you can choose:

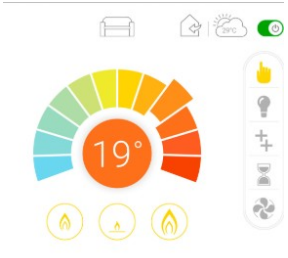

Manual Mode

Thermostatic Mode

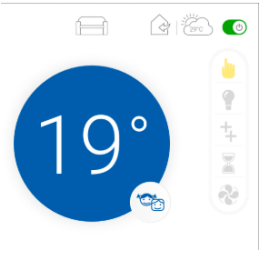

Child Safety Lock

Countdown Timer

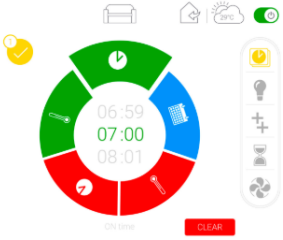

Programme Mode

Eco Mode

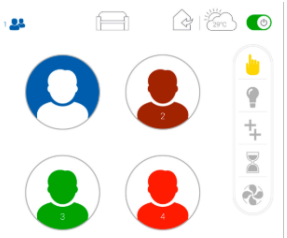

Profiles

MANUAL MODE

Manually decrease or increase flame height.
Touch the colour wheel to decrease or increase flame height. Blue is low flame and red is high flame.
For instant adjustment, touch small flame icon for low fire or large flame icon for high fire. Touch standby icon for pilot flame.

THERMOSTATIC MODE

The room temperature is measured and then compared to the set temperature. The flame height automatically adjusts to achieve the set temperature.

1. Select Thermostatic Mode from the left sidebar.
2. Touch the color wheel to set the temperature. Blue is the lowest temperature setting and red is the highest.

After touching the color wheel, the new set temperature is shown in the middle of the circle for approx. 3 seconds. After 3 seconds, the room temperature is shown in the middle of the circle. An arrow either above or below the room temperature indicates the flame height going up or down to reach set temperature.

COUNTDOWN TIMER

At the end of a preset countdown time, the fire turns off.

1. Spin the hour wheel to set hour. Spin the minute wheel to set minutes.
2. Touch power button to start Countdown Timer. The time remaining is shown on top of screen next to hourglass icon.
3. Touch power button to stop Countdown Timer.

Note: Countdown Timer only works in Manual, Thermostatic, and Eco modes.

PROGRAMME MODE

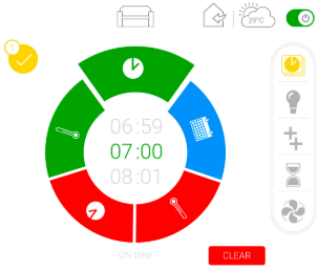

Each of 8 programmes can be set to go ON and OFF at specific times at set temperatures.

1. Select Program Mode from the left sidebar.
2. Turn ON desired Program (1 – 8) by touching the power button.
3. To change days, times, or ON/OFF temperature, touch the program number (circle 1).
4. Touch the section of the setting wheel to be changed (time, temp, day) Change the setting.
5. Confirm your changes by touching the yellow checkmark.

NOTE: To delete a program, touch that program number and go to program settings. Touch red CLEAR button and then touch the red check mark.

ECO MODE

Save energy while enjoying a changing, realistic flame picture.

1. Choose between low fire, medium fire, and high fire.
2. Choose time button (15 min, 20 min, or 25 min). The percentage of energy saved is shown in the circle/leaf.

NOTE: A shorter time cycle results in a more active flame picture.

Automatic Energy Saving Mode

Corresponds to the set temperature in Thermostatic Mode.

1. Touch/slide auto temperature button next to flame button to ON.

If the room temperature is lower than the set temperature, the flame height stays on high for a longer period of time. If the room temperature is higher than the set temperature, the flame height stays on low for a longer period of time.

2. Choose the time button (15 min, 20 min, or 25 min). The percentage of energy saved is shown in the circle/leaf.

NOTE: A shorter time cycle results in a more active flame picture.

CHILD SAFETY LOCK

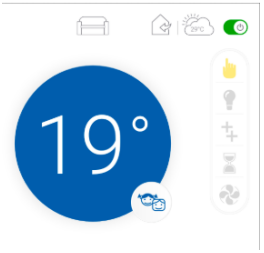

Renders smart device inoperable except for the OFF function and information page.

A pop-up shows user the Child Safety Lock is ON, and the Safety Lock icon appears on the lower right quarter of the home screen's blue temperature circle.

To deactivate Child Safety Lock, touch the Child Safety Lock icon in the left menu and on the lower right quarter of the blue temperature circle simultaneously for 2 seconds.

PROFILES

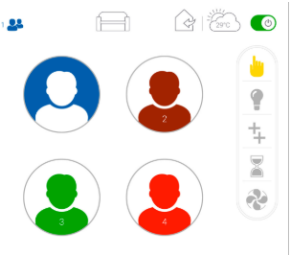

Save individual fireplace settings in up to 4 different profiles. Select 1 of the 4 programs.

NOTE: Selecting a profile for the first time saves current fireplace settings to that profile.

Change a setting and a pop-up asks if you want to save the change to that profile. Exit profile by changing a profile setting, and not saving change in pop-up.

ASSEMBLY SCHEME

Mobile Device
with myfire App
(Android/iOS)

REQUIRED HANDSET

The Puck – Handset (optional)
B6R-H8(9)SP...

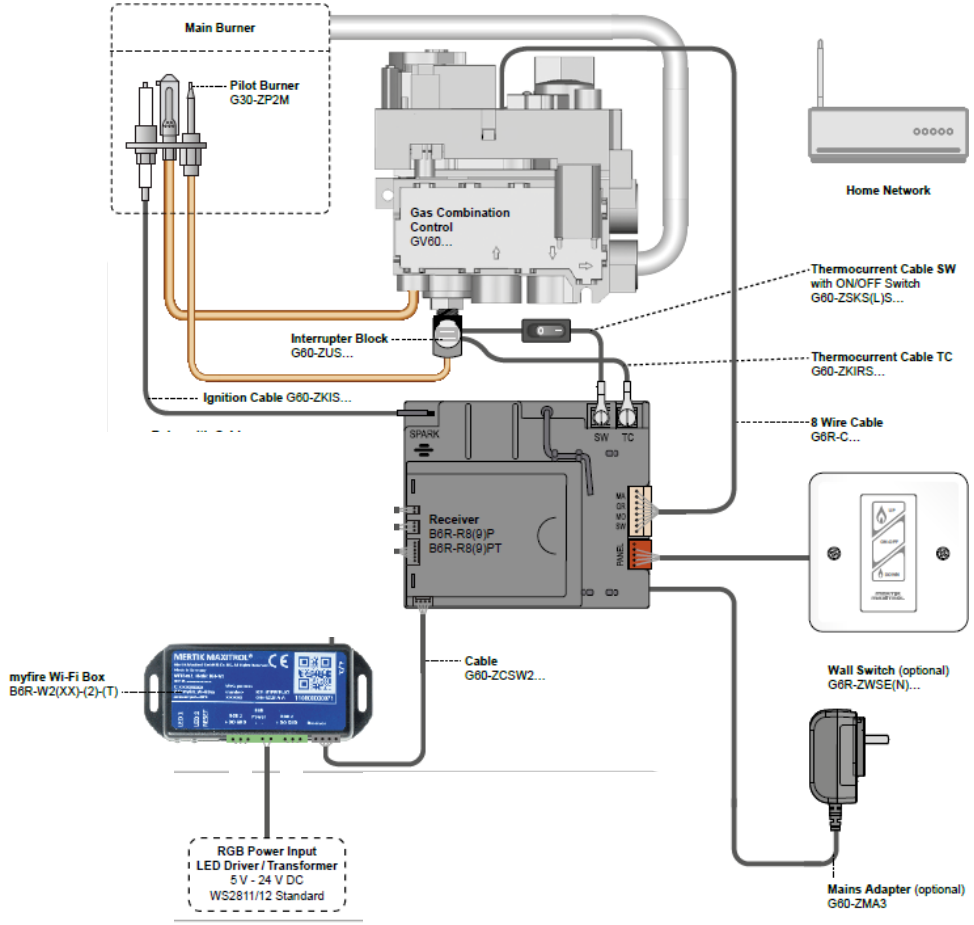

5.2—TO TURN OFF GAS TO APPLIANCE

If gas control is accessible turn main valve knob to the OFF full clockwise position.

AUTOMATIC TURN DOWN

3 Hours No Communication Function

- The valve will turn to pilot flame if there is no communication between handset and receiver for a 3 hours period. The fire will continue to function normally when communication is restored.

Receiver Overheating

Valve turns to pilot flame if the temperature in the receiver is higher than 140 ºF (60ºC). The main burner turns back on (manually or in Thermostatic Mode) only when the temperature is below 140ºF (60ºC).

5.3—AUTOMATIC SHUT OFF

Low Battery Receiver

- With low battery power in the receiver the system shuts off the fire completely. This will not happen if the power supply is interrupted.

On-Demand Pilot

- When the appliance is inactive for an extended period of time the system automatically extinguishes the pilot. This feature helps the consumer realize cost benefits by automatically eliminating energy consumption during non-heating months and limited use.
- The programmed length of inactivity to activate the system is specified by the appliance manufacturer and cannot be altered in the field.

6—CHECKLIST OF PROBLEMS

PROBLEM	CAUSE OF THE PROBLEM	SOLUTION
Controller does not give signal	There is no power	Turn on power Replacing Batteries Replacement Controller
Burner does not turn on	Closed gas valve	Turn on the gas valve Check remote control batteries Checking the receiver's batteries
	Low pressure	Bottle almost empty. Change bottle.
	Locked burner gas outputs	Clean or unblock burner gas outlets
	Defective thermocouple	Contact retailer
	Pilot does not turn on	Check Procedure "Pilot does not turn on"
	Pilot turns on	Check Gas connection: •Check gas flow to the burner
		No gas is supplied to the burner •Contact retailer
		Valve in manual mode: •Select automatic mode (see Figure 19)
		Switch off: •Turn on switch (see Figure 20)
		Flame does not focus properly on the thermocouple: •Handle the pilot lightly at the same point directly on the thermocouple (to be performed by a qualified technician) •Defective thermocouple (Contact retailer)

PROBLEM	CAUSE OF THE PROBLEM	SOLUTION
Pilot does not turn on	There is no power	Check power connection Check remote control batteries
		Check controller batteries
	Gas bottle reducer turned off	Turn on gas bottle reducer
	Empty gas bottle	Change gas bottle
	Air in the supply system	Purge air (action to be performed by a technician)
	Loose connections	Check connections
	Controller does not give signal	Turn on power Replacing batteries Replacement controller (Contact retailer)
	Piezzo does not Sparkle	If controller gives signal: Defective Piezzo (Contact retailer) If controller does not give signal Follow procedure "Controller does not signal"
	Gas does not reach the pilot	Check gas connection Check controller Check valve (action to be performed by a technician)
	Dirt around the pilot	Clean dirty area
Pilot does not stay lit	Loose connections	Check connections
	Defective thermocouple	(Contact retailer)
	Gas leak	Check connections
	Lack of fuel pressure	Bottle almost empty. Change bottle.
	Dirt around the pilot	Clean dirty area

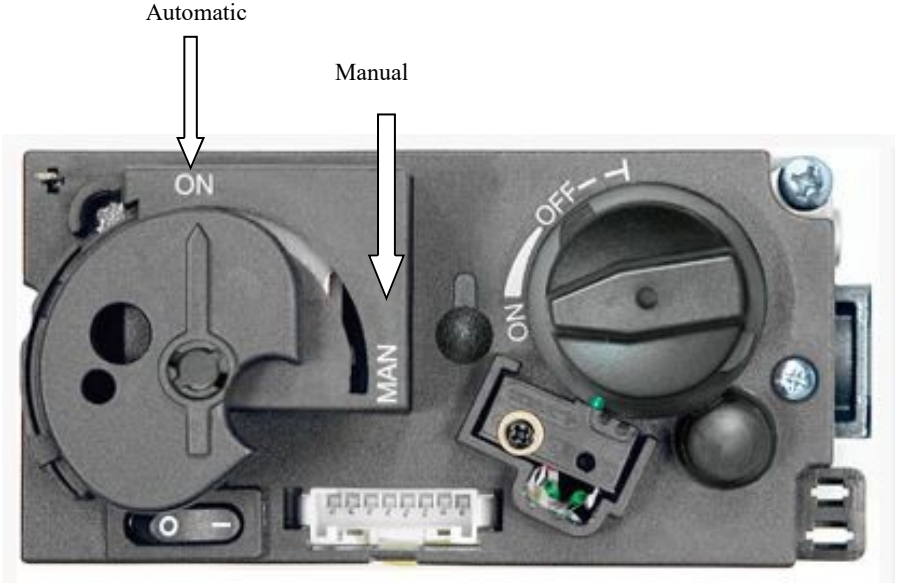

Figure 19:Identification selection manual / automatic valve mode

Figure 20:Identification switch

7—FAILURE CODE LIST-APP

MESSAGES SHOWN IN APP MYFIRE			
FAILURE CODE	**MESSAGE SHOWN IN APP**	**SYMPTOM**	**POSSIBLE CAUSE**
F02	F02 Contact Service	• 5 sec. Beep from receiver • Fire is not responding	• Microswitch not making contact with cam on motor knob • Motor wiring
F03	F03 Contact Service	• Ignition process is interrupted • 5 sec. Beep from receiver • Fire is not responding	• Thermocouple wiring incorrect or interrupted • ON/OFF switch in “O” (OFF) position
F04	F04 Ignition Sequence Malfunction. Wait 1 minute Retry ignition	• No pilot flame within 30 sec. • Note: After 3 failed ignition sequences F06 shown	• No gas supplied • Air in pilot supply line • No spark • Reversed polarity in thermocouple wiring • LPG injector in NG appliance (if valve has been converted)

F06	F06 Contact Service	• Fire is not responding • 3 failed ignition sequences within 5 minutes	• No gás supply • Air in pilot supply line • No spark • Reversed polarity in thermocouple wiring • LPG injector in NG appliance (if valve has been converted)
F10	F10 Contact Service	• Main burner fails to ignite and pilots shuts off • Ignition is blocked for 2 minutes	• 2nd thermocouple is out of position
F12	F12 Contact Service	• Motor turns to pilot position	• Receiver temperature exceeds 60ºC • No air circulation in firebox
F13	F13 Contact Service	• Motor turns to pilot position	• Receiver temperature exceeds 80ºC • No batteries in Receiver
F14	F14 Contact Service	• 5 sec. Beep from Receiver • Fire is not responding, no ignition	• Wrong receiver • Receiver software doesn't support a 2nd Thermocouple

F15	F15 Contact Service	• 5 sec. Beep from Receiver • Fire is not responding, no ignition	• 2nd thermocouple is not connected
F16	F16 Handset out of range	• No temperature shown in app	• Handset out of range for 1.5h • Electrical interference
F17	F17 Contact Service	• No ignition	• Inlet voltage exceeds 7.25V • Malfunction of mains adapter
F19	F19 Contact Service	• Pilot drops when motor opens main gas	• Insufficient thermo-voltage • Thermocouple malfunction • Low inlet gás pressure • Valve malfunction • Resistance in thermocurrent circuit
F26	F26 Contact Service	• It is not possible to increase flame height after ignition	• Receiver temperature is above 60ºC

F28	F28 On-Demand Pilot	• Pilot shuts off	Pilot shuts off after no motor movement for a predetermined time • Electronics have switched off due to low battery power
F31	F31 Contact Service	• Fire is not responding • No electronic control of fire	• Receiver malfunction
F41	F41 Check WI-Fi	• Fire is not responding • No electronic control of fire	• No power to myfire Wi-fi box or router • No Wi-fi connection to myfire Wi-fi box router and/or smart device
F43	F43 No receiver Connected Contact Service	• Fire is not responding • No electronic control of fire	• No communication between receiver and myfire Wi-fi box
F44	F44 Contact Service	• No temperature shown in App • “N.a” (Not applicable) displayed in app	• No handset available • Handset batteries dead

8—MAINTENANCE

If something is spilled on the appliance, turn it off immediately and wait for its cooling before cleaning it. Never use scouring powder, aggressive cleaners or fire polish products on the gas fire. Use only a dry lint free cloth.

Weekly Maintenance

When the appliance is frequently used, clean the combustion area and stones weekly, so it doesn’t accumulate any kind of residue or soot.

Annual Maintenance

It is essential to keep the appliance, full concentric flue system (where possible) and the outlets completely cleaned. They should be inspected annually by a recognized fitter/gas specialist.
The safe operation of the appliance will thus guaranteed.

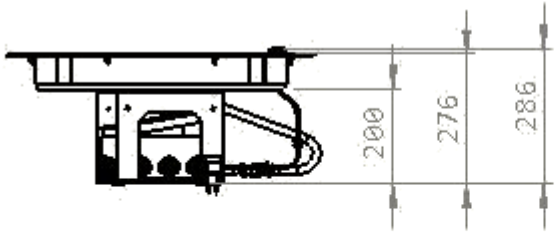
200
276
286

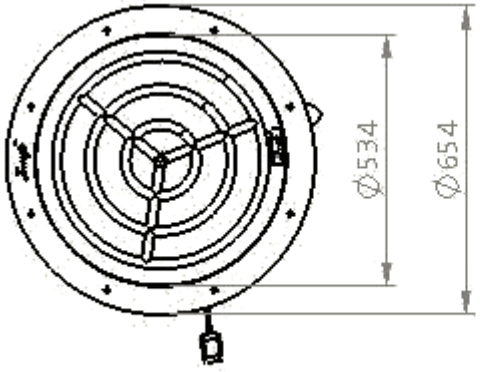
Ø534
Ø654

	Appliance category	I3+(28-30/37)	I3+(28-30/37)	Natural gas (EN437)
	Gas Type	Butano	Propano	Natural
	Maximum capacity of the gas bottle (Kg)	13	11	-
Gas combustion zone round	Max power (Kw)	19	20	39.8
	Air mixer diam. (mm)	3	3	3.5
	Output pressure Reducer (mbar)	28-30	37	20
	Gas rate	860—2300 g/h		1.4—3.7 m3/h
	Combustion system	Open		
	Main burner	Ø 535 mm		
	Gas connection	3/8” G / Ø 12 mm (ISO 7-1/EN 10226-1)		
	Gas combination control - Approvals	Gas Appliances Directive 2009/142/CE DIN EN298 / DIN EN126 / DIN EN13611		

PT07701-G

glamm® fire

GlammFire
Recuperadores Pachinha, Lda.
Zona Industrial da Lagoa, Lote G1
4950-850 Monção
Portugal

info@glammfire.com
T. +351 251 654 800 | F. +351 251 654 801

www.glammfire.com

/ glammfire